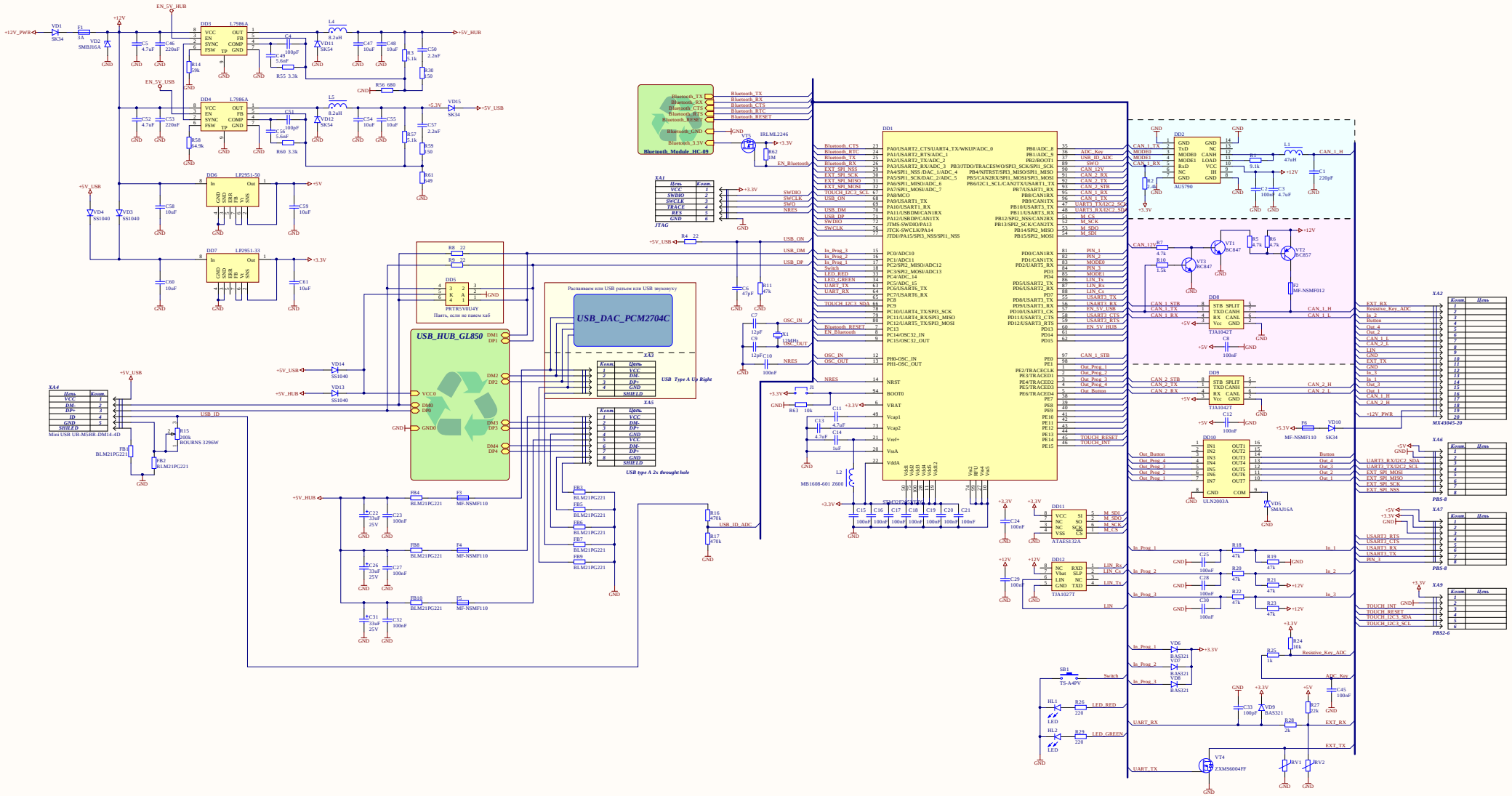
+12V_PWR
VD1 SK34
F1 3A SMBJ16A
VD2
+12V
EN_5V_HUB
DD3 L7986A
VCC EN SYNC FSW OUT FB COMP GND TP
C5 4.7uF
C46 220uF
C4 100pF
R14 29k
R55 3.3k
L4 8.2uH
VD11 SK54
C47 10uF
C48 10uF
R3 5.1k
C50 2.2nF
R30 150
+5V_HUB
EN_5V_USB
DD4 L7986A
C52 4.7uF
C53 220uF
C51 100pF
R58 54.9k
R60 3.3k
L5 8.2uH
VD12 SK54
C54 10uF
C55 10uF
R56 680
+5.3V
VD15 SK34
+5V_USB
C57 2.2nF
R57 5.1k
R59 150
R61 249
DD6 LP2951-50
In Out GND ERR FB SHDN SNS
+5V
C58 10uF
C59 10uF
VD4 SS1040
VD3 SS1040
DD7 LP2951-33
+3.3V
C60 10uF
C61 10uF
R8 22
R9 22
DD5
PRTR5V0U4V
Плата, если не панел хаб
USB_HUB_GL850
DM1 DP1 DM2 DP2 DM3 DP3 DM4 DP4 VCC0 DM0 DP0 GND0
VD14 SS1040
VD13 SS1040
Распаяшем или USB разъем или USB звуковуху
USB_DAC_PCM2704C
XA3
USB Type A Up Right
XA5
USB type A 2x throught hole
XA4
Mini USB UB-MSBR-DM14-4D
USB_ID
R15 100k BOURNS 3296W
FB1 BLM21PG221
FB2 BLM21PG221
FB4 BLM21PG221
F3 MF-NSMF110
C22 33uF 25V
C23 100nF
FB8 BLM21PG221
F4 MF-NSMF110
C26 33uF 25V
C27 100nF
FB10 BLM21PG221
F5 MF-NSMF110
C31 33uF 25V
C32 100nF
FB3 BLM21PG221
FB5 BLM21PG221
FB6 BLM21PG221
FB7 BLM21PG221
FB9 BLM21PG221
R16 470k
R17 470k
USB_ID_ADC
Bluetooth_Module_HC-05
Bluetooth_TX
Bluetooth_RX
Bluetooth_CTS
Bluetooth_RTC
Bluetooth_RESET
Bluetooth_GND
Bluetooth_3.3V
VT2 IRLML2246
R62 1M
EN_Bluetooth
XA1
JTAG
VCC SWDIO SWCLK TRACE RES GND
SWDIO
SWCLK
SWO
NRES
R4 22
USB_ON
USB_DM
USB_DP
C6 47pF
R11 47k
C7 12pF
C9 12pF
OSC_IN
OSC_OUT
R1 12MHz
C10 100nF
NRES
J1
R63 10k
C11 4.7uF
C13 4.7uF
C14 1uF
L2 MB1608-601 Z600
C15 100nF
C16 100nF
C17 100nF
C18 100nF
C19 100nF
C20 100nF
C21 100nF
DD1
STM32F207VCT6
PA0/USART2_CTS/UART4_TX/WKUP/ADC_0
PA1/USART2_RTS/ADC_1
PA2/USART2_TX/ADC_2
PA3/USART2_RX/ADC_3
PA4/SPI1_NSS/DAC_1/ADC_4
PA5/SPI1_SCK/DAC_2/ADC_5
PA6/SPI1_MISO/ADC_6
PA7/SPI1_MOSI/ADC_7
PA8/MCO
PA9/USART1_TX
PA10/USART1_RX
PA11/USBDM/CAN1RX
PA12/USBDP/CAN1TX
JTMS-SWDIO/PA13
JTCK-SWCLK/PA14
JTDI/PA15/SPI3_NSS/SPI1_NSS
PB0/ADC_8
PB1/ADC_9
PB2/BOOT1
PB3/JTDO/TRACESWO/SPI3_SCK/SPI1_SCK
PB4/NJTRST/SPI3_MISO/SPI1_MISO
PB5/CAN2RX/SPI3_MOSI/SPI1_MOSI
PB6/I2C1_SCL/CAN2TX/USART1_TX
PB7/USART1_RX
PB8/CAN1RX
PB9/CAN1TX
PB10/USART3_TX
PB11/USART3_RX
PB12/SPI2_NSS/CAN2RX
PB13/SPI2_SCK/CAN2TX
PB14/SPI2_MISO
PB15/SPI2_MOSI
PC0/ADC10
PC1/ADC11
PC2/SPI2_MISO/ADC12
PC3/SPI2_MOSI/ADC13
PC4/ADC_14
PC5/ADC_15
PC6/USART6_TX
PC7/USART6_RX
PC8
PC9
PC10/UART4_TX/SPI3_SCK
PC11/UART4_RX/SPI3_MISO
PC12/UART5_TX/SPI3_MOSI
PC13
PC14/OSC32_IN
PC15/OSC32_OUT
PH0-OSC_IN
PH1-OSC_OUT
NRST
BOOT0
VBAT
Vcap1
Vcap2
Vref+
VssA
VddA
PD0/CAN1RX
PD1/CAN1TX
PD2/UART5_RX
PD3
PD4
PD5/USART2_TX
PD6/USART2_RX
PD7
PD8/USART3_TX
PD9/USART3_RX
PD10/USART3_CK
PD11/USART3_CTS
PD12/USART3_RTS
PD13
PD14
PD15
PE0
PE1
PE2/TRACECLK
PE3/TRACED0
PE4/TRACED2
PE5/TRACED3
PE6/TRACED4
PE7
PE8
PE9
PE10
PE11
PE12
PE13
PE14
PE15
ADC_Key
USB_ID_ADC
SWO
CAN_12V
CAN_2_RX
CAN_2_TX
CAN_1_RX
CAN_1_TX
M_CS
M_SCK
M_SDO
M_SDI
EN_5V_USB
EN_5V_HUB
CAN_1_STB
Out_Prog_1
Out_Prog_2
Out_Prog_3
Out_Prog_4
Out_Button
TOUCH_RESET
TOUCH_INT
DD2 AU5790
GND TxD MODE0 MODE1 RxD NC GND
CANH LOAD VCC IH
R1 9.1k
L1 47uH
C1 220pF
C2 100nF
C3 4.7uF
R2 2.4k
CAN_1_H
CAN_1_L
R7 4.7k
R10 1.5k
VT1 BC847
VT3 BC847
R5 4.7k
R6 4.7k
VT2 BC857
F2 MF-NSMF012
DD8 TJA1042T
STB SPLIT TXD CANH RX CANL Vcc GND
C8 100nF
DD9 TJA1042T
C12 100nF
F6 MF-NSMF110
VD10 SK34
DD10 ULN2003A
IN1 IN2 IN3 IN4 IN5 IN6 IN7 GND
OUT1 OUT2 OUT3 OUT4 OUT5 OUT6 OUT7 COM
VD5 SMAJ16A
DD11 ATAES132A
VCC NC NC VSS SI SO SCK CS
DD12 TJA1027T
NC Vbat LIN GND RXD SLP NC TXD
LIN_Rx
LIN_Cs
LIN_Tx
LIN
C24 100nF
C29 100nF
In_Prog_1
In_Prog_2
In_Prog_3
C25 100nF
C28 100nF
C30 100nF
R18 47k
R19 47k
R20 47k
R21 47k
R22 47k
R23 47k
In_1
In_2
In_3
VD6 BAS321
VD7 BAS321
VD8 BAS321
R24 10k
R25 1k
Resistive_Key_ADC
ADC_Key
C45 100nF
C33 100nF
VD9 BAS321
R27 22k
R28 2k
SB1 TS-A4PV
Switch
HL1 LED
HL2 LED
R26 220
R29 220
LED_RED
LED_GREEN
UART_RX
UART_TX
VT4 ZXMS6004FF
JRV1
JRV2
XA2
MX43045-20
EXT_RX
Resistive_Key_ADC
In_2
Button
Out_4
Out_2
CAN_1_L
CAN_2_L
LIN
GND
EXT_TX
In_3
Out_3
Out_1
CAN_1_H
CAN_2_H
+12V_PWR
XA6
PBS-8
Button
Out_4
Out_3
Out_2
Out_1
UART3_RX/I2C2_SDA
UART3_TX/I2C2_SCL
EXT_SPI_MOSI
EXT_SPI_MISO
EXT_SPI_SCK
EXT_SPI_NSS
XA7
PBS-9
USART3_RTS
USART3_CTS
USART3_RX
USART3_TX
PIN_3
XA9
PBS2-6
TOUCH_INT
TOUCH_RESET
TOUCH_I2C3_SDA
TOUCH_I2C3_SCL

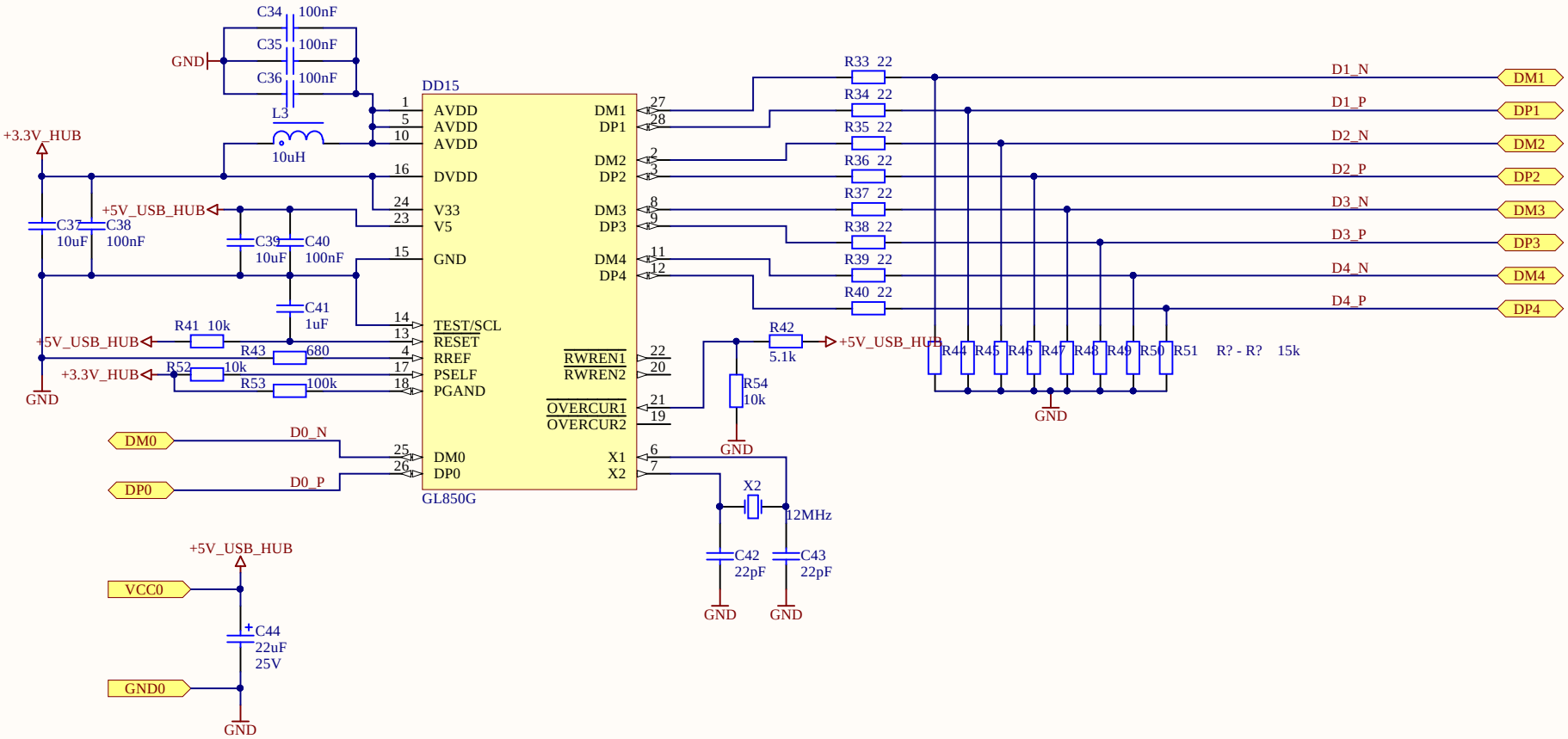
C34 100nF
C35 100nF
C36 100nF
GND
L3
10uH
+3.3V_HUB
DD15
AVDD
AVDD
AVDD
DVDD
V33
V5
GND
TEST/SCL
RESET
RREF
PSELF
PGAND
DM0
DP0
DM1
DP1
DM2
DP2
DM3
DP3
DM4
DP4
RWREN1
RWREN2
OVERCUR1
OVERCUR2
X1
X2
GL850G
+5V_USB_HUB
C37 10uF
C38 100nF
C39 10uF
C40 100nF
C41 1uF
R41 10k
R43 680
R52 10k
R53 100k
R42 5.1k
R54 10k
R33 22
R34 22
R35 22
R36 22
R37 22
R38 22
R39 22
R40 22
D1_N
D1_P
D2_N
D2_P
D3_N
D3_P
D4_N
D4_P
DM1
DP1
DM2
DP2
DM3
DP3
DM4
DP4
R44 R45 R46 R47 R48 R49 R50 R51 R? - R? 15k
D0_N
D0_P
X2
12MHz
C42 22pF
C43 22pF
VCC0
GND0
C44 22uF 25V

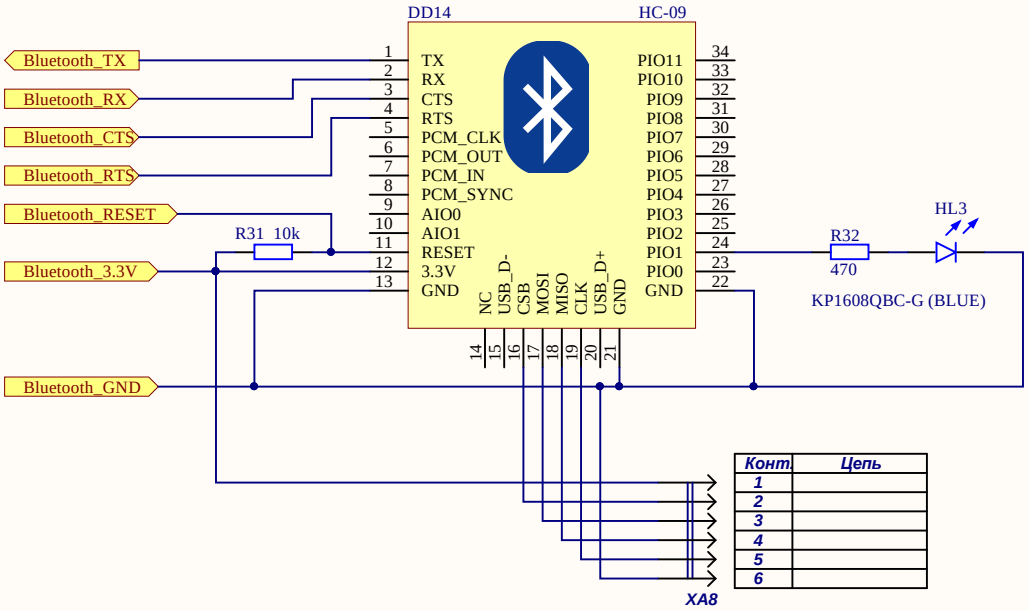

Конт.	Цепь
1	
2	
3	
4	
5	
6	